OPW
P.O. Box 405003
Cincinnati, OH 45240
1-800-422-2525
(513) 870-3100
Fax (800) 421-3297

SERVICE MANUAL

MODEL 103

TELEPHONE **800-422-2525 In US**
513-870-3315 Outside US
FAX **800-421-3297 In US**
513-870-3157 Outside US

Revision 02/02
X31751

TABLE OF CONTENTS

GENERAL OPERATION **5**

OVERVIEW 5
TECHNICAL SUPPORT 5
OPERATING INSTRUCTIONS 5
UNPACKING 5

PACKING LIST **6**

INSTALLATION **7**

STEP BY STEP OVERVIEW 7
SITE PREPARATION 7
SITE SELECTION *7*
SITE PREPARATION *7*
ELECTRICAL SERVICE 7
SPECIFICATIONS *7*
CONNECTIONS & GROUNDING *9*
INSTALLATION OF SUPPLY LINES 9

MOUNTING **10**

INSTALLATION BOLT PATTERNS 10
UTILITY LOCATIONS 10
POSTMOUNT (ASSEMBLY TO GROUND) 10
WALL MOUNT *12*

TROUBLESHOOTING **14**

OVERVIEW 14
CHECK POWER *14*
CHECK ELECTRICAL COMPONENTS/SWITCHES *14*
CHECK COMPRESSOR *14*
ABBREVIATED ELECTRICAL TROUBLESHOOTING GUIDE 15
ELECTRICAL *15*
COMPRESSOR *15*

ELECTRICAL COMPONENT INFORMATION **16**

SOLENOIDS (REMOTE UNITS ONLY) 16
PUSH BUTTON 16
REPLACEMENT PARTS *16*
COIN ACCEPTOR 16
Unit Does Not Come On When Coin Is Dropped: *16*
Unit Will Not Turn Off At End Of 5 Minutes: *16*
REPLACEMENT PARTS *16*
TIMERS 17
COMPRESSORS 19
Specifications *19*
Preventive Maintenance *19*
Pressure Relief Valve *19*
Troubleshooting *19*

MECHANISM **24**

INPUT REQUIREMENTS 24
PSI *24*
CFM *24*
PREVENTIVE MAINTENANCE 24

Drain Regularly (Weekly) *24*
Check For Air Leaks (Weekly) *24*
Calibrate *26*
Prevent Freezing *26*
RECALIBRATION INSTRUCTIONS 26
TROUBLE SHOOTING 28
GENERAL *28*
SLOW INFLATION *28*
BELL RINGS WHEN TIREFLATOR IS NOT IN OPERATION (RUN ON) *28*
MECHANISM CONTINUES TO DELIVER AIR AFTER TIRE INFLATED *28*
LEAKS *28*
BELL DOES NOT RING DURING INFLATION *29*
MECHANISM WILL NOT INFLATE *29*
TIREFLATOR REPORTED TO BE INACCURATE *29*
DIAL WHEELS ARE JAMMED OR SKIP *29*
UNABLE TO COMPLETELY INFLATE HIGH PRESSURE TIRES *29*
BELL STOPS RINGING BUT VALVE DOES NOT SHUT OFF *30*
TIRE INFLATOR LETS AIR OUT OF TIRE *30*
COMPONENT INFORMATION 30
MAIN VALVE *30*
MOTOR ROLLER LEVER / VALVE CAM *31*
MAIN VALVE LOCKOUT LEVER *32*
DIAPHRAGM *32*
DIAPHRAM CHECK VALVES *34*
LOCKOUT SPACER REMOVAL AND INFORMATION *35*
DRAIN PLUG *36*
BELL AND BELL CLAPPER *36*
HEATER KIT *36*
NUMBER WHEELS / LOCKING PAWL *37*
PARTS IDENTIFICATION *38*
SPARE PARTS 41
MECHANISM REPLACEMENTS *41*
REPAIR PARTS / KITS *42*

PARTS IDENTIFICATION **43**

REPLACEMENT PARTS - GENERAL **45**

WARRANTY **46**

TABLE OF FIGURES

AIR SUPPLY LINES 9
WIRING LOCATIONS 17
INFITEC MULTICOIN TIMER 18
THOMAS COMPRESSOR 120V 21
THOMAS COMPRESSOR ASSEMBLY 23
MECHANISM (Front view) 38
MECHANISM (Back View) 39
DIAPHRAGM / COVER 40
DIAPHRAGM / COVER 41
MODEL 103 OUTSIDE VIEW 43
MODEL 103 INSIDE COMPONENTS 44

GENERAL OPERATION

OVERVIEW

This manual has been prepared as an aid in installing, diagnosing, and repairing ECO BY OPW units in all of their configurations. In general they are supplied in two styles:

***Self Contained Units (with their own compressor)**
***Remote Units (operate off a remote compressor)**

Units may come with a variety of optional features. Please read closely to identify the components on your machine.

TECHNICAL SUPPORT

Our technical support staff is available at 1-800-422-2525 during normal business hours (7:00 - 6:00 E.S.T.) to answer any questions regarding machine operation, components or spare parts. When calling technical support **it is extremely helpful to have the serial number and the machine model number readily available.**

OPERATING INSTRUCTIONS

1. Dial the desired pressure using the red dial wheel.
2. Activate unit by pressing the push button or dropping a coin.
3. As soon as the chuck is applied to a tire which has a pressure less than that which has been pre-set on the gauge, the meter will provide a series of air pulsation's until the pressure in the tire is in balance with the pre-set pressure.
4. Each pulsation causes a bell to sound, which indicates that air is flowing into the tire. Inflation is completed when the bell stops ringing.
5. When the chuck is removed from the tire, the bell will ring again, indicating that the hose is being recharged in readiness for its next use. If the chuck is applied to an over-inflated tire, the bell will not ring.
6. When finished inflating, replace hose.

UNPACKING

Immediately inspect your unit for concealed loss or damage which occurred in transit. If any such condition is found contact the carrier's agent and file a claim immediately. There is a specific time limit for requesting a claim.

ECO BY OPW strongly recommends that you save the original factory packaging. For some models warranty service requires that you return the unit to the factory via UPS. Factory packaging should prevent damage in shipment. If you require new packaging contact the factory

PACKING LIST

Check the contents of your shipment against the diagram below. If you have any questions or any parts are absent please contact the factory immediately.

**** Note: The gusset and wall mount bracket are optional -- (for wall mounting only).**

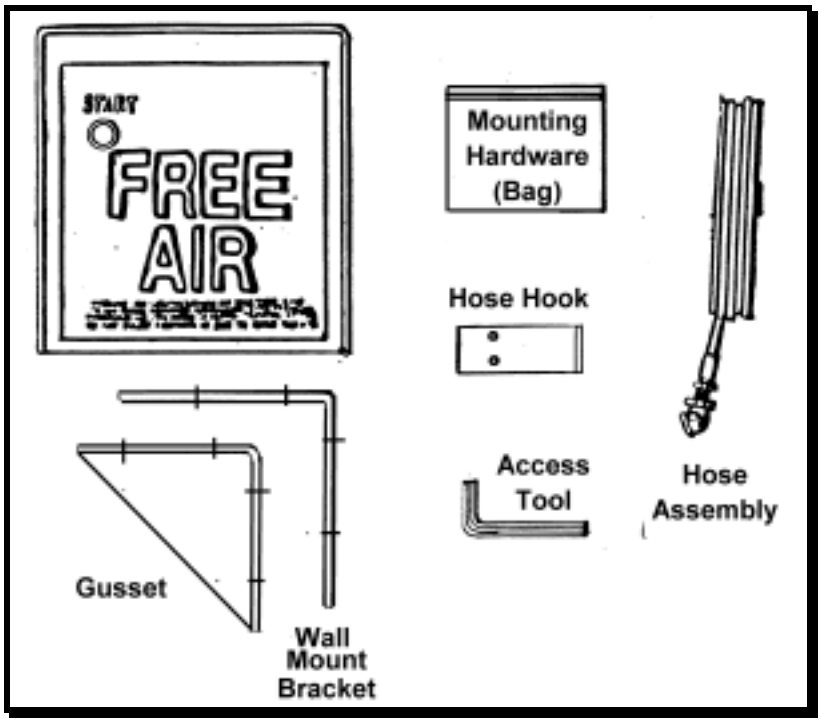

HARDWARE PACKET

QTY	PART#	DESCRIPTION	CONNECTION
4	33109	_-20x 3/4 Flush Mount Stud	Gusset to Wall Mount Bracket
4	30617	_-20 Nuts W/Lockwashers	Gusset to Wall Mount Bracket
4	817137	_" Flat Washer	Gusset to Wall Mount Bracket
2	816253	5/16-18x3/4 Hex Head Bolt	Hose Hook to Machine
6	30023	5/16 Lockwasher	Machine Mount and Hose Hook
3	817429	Wire Connectors	Machine To Bracket Or Post
1	30029	5/16 Nut	Machine To Bracket Or Post
4	33122	Washer Rubber 3/8 X 1 In. Dia	Machine To Bracket Or Post
3	30030	5/16-18x1 Hex Head Bolts	Machine To Bracket Or Post
1	32151	5/16-18x1 Flush Mount Stud	Machine To Bracket Or Post
4	33125	3/8x3" Concrete Sleeve Anchor	Wall Mount Bracket To Wall
4	33127	3/8 Flat Washer	Wall Mount Bracket To Wall
4	33128	3/8 Nut	Wall Mount Bracket To Wall

INSTALLATION

STEP BY STEP OVERVIEW

÷		INSTALLATION CHECKLIST
	1	Prepare site in accordance with Site Preparation And Assembly Instructions.
	2	Install proper power lines as per Electrical Service.
	3	Run supply lines (air and / or water) if needed per Installation of Supply Lines.
	4	Install wall mount bracket or post and mount cabinet. (See Mounting)
	5	(Water Option only) Install water valve in post and connect. Connect hose and hang up.
	6	Push START button or insert quarter(s). Check operation.

SITE PREPARATION

SITE SELECTION

Before selecting a location, refer to the Electrical Code information. Also make sure you are in compliance with local codes.

****IMPORTANT NOTE** - Never install this equipment where its use cannot be observed and/or supervised. Unobserved equipment invites vandalism and theft.**

SITE PREPARATION

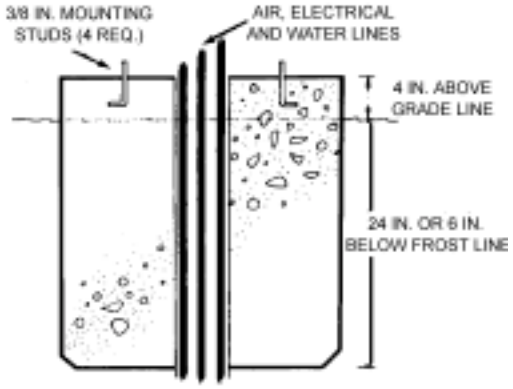

ECO BY OPW tire inflators should be mounted on a 26" X 26" concrete pad which should extend 4" above, and 24" below grade level, or 6" below frost line, whichever is deeper.

Utility Requirements:

Outdoor approved electrical conduit. Refer to electrical specification information on specific machine installation requirements and air supply line for units without on-board compressor (remote). Air line for remote air service 1/4" MPT. Water line for water service units equipped with 1/4" MPT.

ELECTRICAL SERVICE

SPECIFICATIONS

ECO BY OPW Tireflators are not classified for use in Class I locations. Accordingly, if installed within 20 feet of a gas dispenser, the unit must be placed so that the compressor is 18 inches away from the gas dispenser and 18 inches above ground level. All motors in ground-mount units are already mounted well above the 18-inch Class I Division 2 requirement. All

underground wiring must be installed in rigid metal conduit or threaded steel intermediate conduit. Rigid non-metallic conduit complying with Article 347 (NEC 1993) is permitted where buried under not less than 24 inches (610 mm) of earth.

Where rigid non-metallic conduit is used, threaded rigid metal conduit or threaded steel intermediate metal conduit shall be used the last 24 inches (610 mm) of the underground run to emergence or to the point of the connection to the underground raceway. An equipment-grounding conductor shall be included to provide electrical continuity of the raceway system and for ground of non-current-carrying metal parts. All underground and branch circuit wire should be type THHN or THWN solid wire.

CONNECTIONS & GROUNDING

This product should be connected to a grounded, metallic, permanent wiring system, or equipment grounding terminal lead on the product. Each tireflator should have a separate branch circuit as below.

			Copper Wire Gauge for Length of Run From Breaker	
	Circuit Protection (115V)	AMP Rating	0 – 50ft.	50 – 200ft.
Without Compressor	5A	.07	14	14
With Thomas Compressor	20A	10.6	12	10
With Vacuum Only (2000V)	15A	10.0	12	10
Combination Air & Vac	30A	20.6	10	10

NOTE: Voltage at the unit must be within +/- 10% of the motor nameplate voltage (115V). Undersized circuits or wiring can lead to premature motor failure or circuit breaker tripping.

INSTALLATION OF SUPPLY LINES

(REMOTE AIR UNITS ONLY) Before connecting any ECO by OPW tireflator completely clear air lines with pressurized air. Clean, dry air is required for all installations. Pipe scale, water and other contaminants will be pumped through the unit into customer tires and can damage components within the machine. Water in the lines or tank will collect in the hose and can cause the chuck to freeze.

NOTE: If air compressor is installed in basement, slope supply pipe toward compressor. No water trap is necessary.

AIR SUPPLY LINES

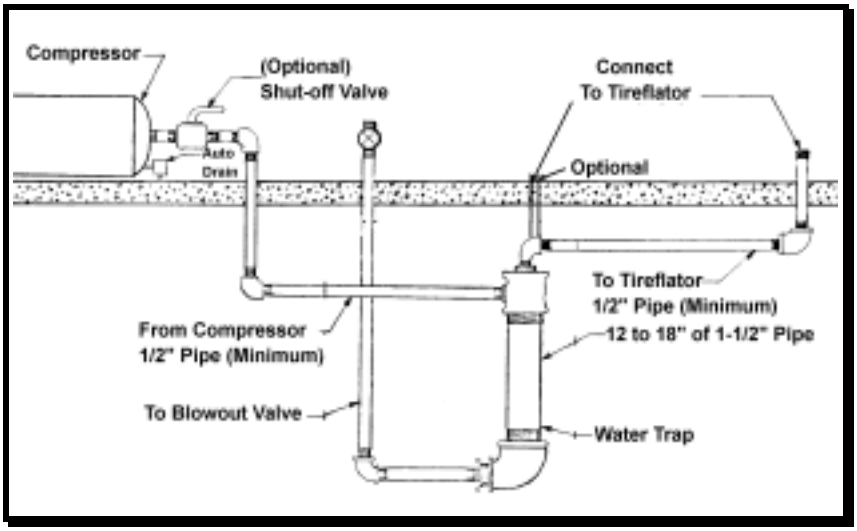

An automatic drain on the tank is strongly recommended. If an automatic drain is not installed, the tank must be drained frequently. All sections of supply line should be below the frost line and slope toward water trap as shown. A valve should be attached to the outlet pipe and trap should be blown out frequently.

MOUNTING

INSTALLATION BOLT PATTERNS

WALL		POST	
WIDTH	HEIGHT	WIDTH	HEIGHT
8.00	8.00	8.75	8.75

UTILITY LOCATIONS

For wall mount units utility inlets should be run to a position 14" above and 1" left of the upper left of the mounting pattern. For post mount units the utility inlets should be in the center of the concrete pad.

POSTMOUNT (Assembly to Ground)

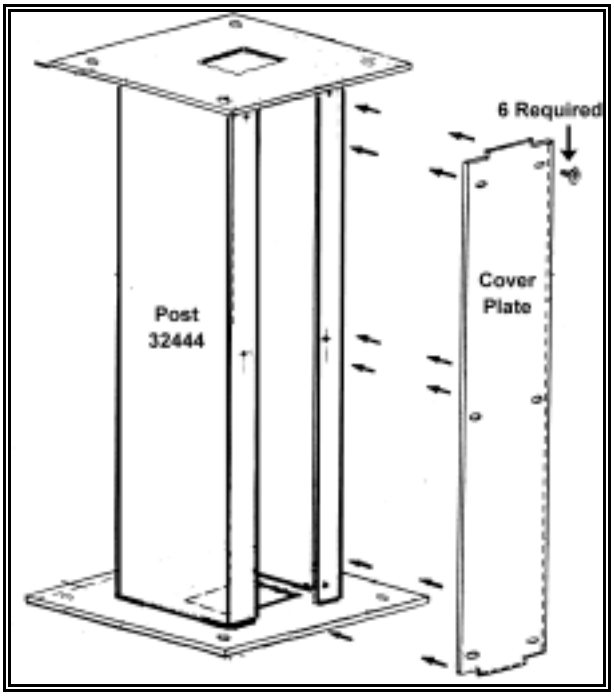

1. Use a carbide drill bit with a 3/8" diameter and drill 4 holes 1.5 to 2.0 inches deep. NOTE – The hardware provided is to be used on solid concrete only. Use the correct mounting anchors for the surface selected for your installation. Mounting pattern is 8.75 x 8.75 square. A 4" diameter hole must be provided in the center of the pad to route electrical and optional air and water service to the machine.

2. Place nut on end of anchor sleeve and tap sleeves into holes. When sleeves bottom out, remove nuts. Slide post over exposed ends of sleeve anchors. Mount post to pad with flat washers and nuts (3/8) supplied in the hardware package. DO NOT OVERTIGHTEN!

3. Secure base of post to the concrete pad.
4. Remove the machine cover using the access tool provided (8 screws and washers)
5. Insert rubber washer mounts between unit and post. (See Machine Mounting)
6. Secure the unit to the post using the hardware provided (3 bolts and 1 flush mount stud with nut)
7. Route power cord through bottom of machine to base of post. Make electrical connection with incoming power.
8. (Remote units only) Route air hose through machine to base of post. Make connection to incoming air supply (1/4" MPT fitting).
9. Install cover plate on post as shown.
10. Replace cover on unit.

11. Start unit by pushing button or dropping quarter. Check for loose hardware or excessive vibration.

****NOTE** Before tightening mounting nuts make sure post is plumb and base plate is level.**

MACHINE MOUNTING - POST OR BRACKET

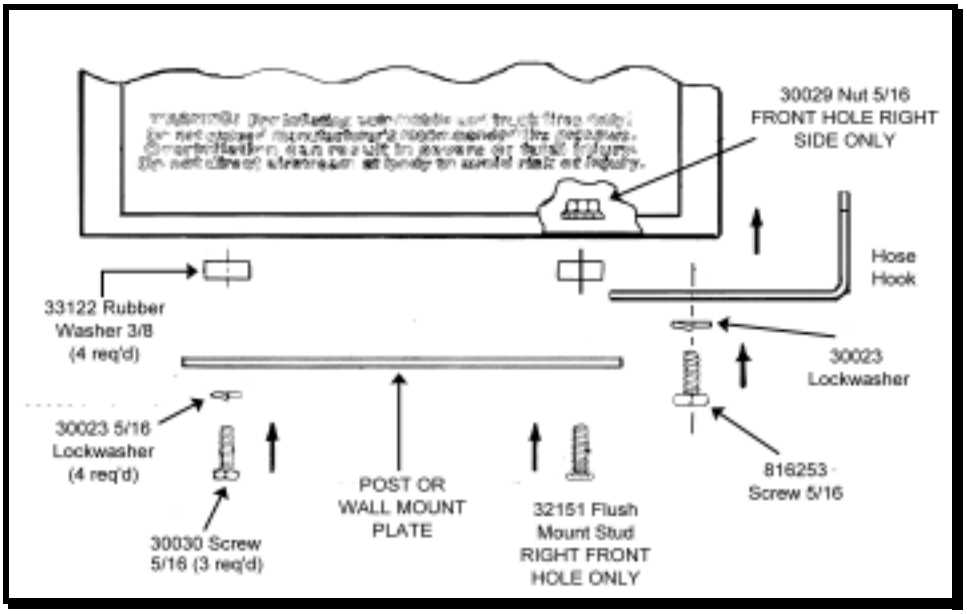

WALL MOUNT

1. Select a flat vertical surface within view of the station attendants.
2. Mount gusset to wall mount bracket (See Drawing) . Gusset should sit directly in middle of mounting bracket.
3. Using the supplied wall mount bracket as a template drill four (4) holes in wall. The bracket should be located approximately 32" from ground level to the top surface of the bracket.
4. An additional 2" hole is required for utilities. This should be run approximately 14" above and 1" left of the upper left hole in the mounting pattern.
5. Use a 3/8" carbide drill bit and drill 4 holes 1.5 to 2.0 inches deep. **NOTE – The hardware provided is to be used on solid concrete walls only. Use the correct mounting anchors for the surface selected for your installation.**
6. Place nut on end of anchor sleeve and tap sleeves into holes. When sleeves bottom out, remove nuts
7. Slide bracket over exposed ends of sleeve anchors. Mount bracket to wall with flat washers and nuts (3/8) supplied in the hardware package. DO NOT OVERTIGHTEN!

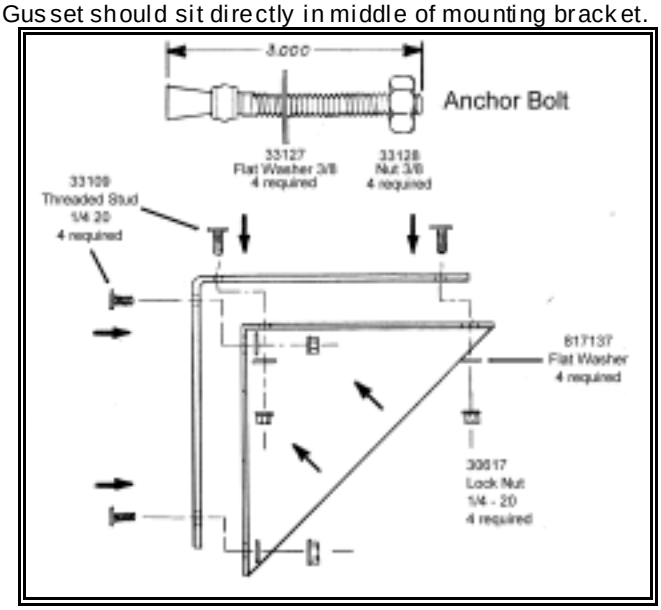

8. Remove cover of unit using access tool provided (8 screws).
9. Remove electrical access plug in upper back of cabinet.
10. Rest complete unit on the wall mount bracket
11. Route 110-volt electrical cord through access hole. Connect to incoming power.
12. (Remote units only) Route air hose through access hole. Connect to incoming air supply.
13. Insert rubber washers over mounting holes between the cabinet and the bracket. Bolt cabinet to mounting bracket using 3 bolts and the flush mount stud with nut. (See Machine Mounting)
14. Install hose hook bracket. Hang up air hose.
15. Re-install cover on unit.
16. Start unit by either pushing button or inserting quarter(s). Check for proper operation

**** NOTE ** - Before tightening mounting nuts make sure bracket is plumb and level. Shim if necessary.**

TROUBLESHOOTING

OVERVIEW

This guide lays out a simple, step-by-step guide to isolating and solving technical problems that will ensure that the unit is repaired properly and completely the first time. ECO BY OPW tire inflation products come in a variety of configurations. There are three major component areas which may fail:

- Electrical / Switches
- Compressor
- Mechanism (Optional Feature)

Units may have any combination of the above components to meet the requirements of the installation. To properly diagnose problems which may arise, the service technician must first...**ISOLATE THE PROBLEM.** This guide lays out a simple, step-by-step guide to isolating and solving technical problems that will ensure that the unit is repaired properly and completely the first time. In order to isolate the problem follow this guide to first check all electrical components. If the unit you are working on does not have a particular component skip to the next section. If all of the electrical components are operating correctly and your unit has a balanced inflation mechanism (optional feature) move on to the MECHANISM section.

CHECK POWER

Before checking electrical components first confirm that the installation of the unit conforms to the electrical specifications and connections detailed in the installation section of this manual.

!! WARNING !!

DO NOT attempt to service or repair this unit unless ALL ELECTRICAL POWER HAS BEEN DISCONNECTED. Install a wall-mounted safety switch near the unit. The switch should be enclosed in a box that may be locked in the OFF position. ALWAYS place the switch to OFF and LOCK the switch BEFORE servicing the unit.

FAILURE TO OBSERVE THIS SAFETY PRECAUTION MAY RESULT IN FATAL ELECTRICAL SHOCK OR PROPERTY DAMAGE.

CHECK ELECTRICAL COMPONENTS/SWITCHES

1. Activate unit (push button or drop coin(s))
2. If compressor switches on (self-contained compressor) or solenoids open (remote compressor) then skip to **COMPRESSOR**.
3. If the unit does not come on then see **ELECTRICAL**.

CHECK COMPRESSOR

1. Check compressor CFM and PSI output with a gauge of known accuracy.
2. If compressor output is below requirements or if compressor operates intermittently then see **COMPRESSOR**.

ABBREVIATED ELECTRICAL TROUBLESHOOTING GUIDE

Note - This section is designed to help isolate and troubleshoot problems with electrical components (switches, timers, and compressors). More detailed information concerning individual electrical components is available in the Component section of this manual.

ELECTRICAL

PROBLEM	SOURCE	TEST	REPAIR
UNIT WILL NOT START	No power	Breaker Tripped	Reset and retest
	Inadequate power	Check voltage and circuit for 120 volts at Timer	Restore power
	Coin Drop Failure	Check Micro switch continuity	Replace
		Trip wire missing, broken, or out of adjustment.	Repair or replace.
	Pushbutton Failure	Test continuity with pushbutton depressed.	Replace defective switch
	Timer failure	Activate timer with pushbutton or coin drop. Check voltage at terminal 9.	Replace timer with 31211 timer kit (standard) or 33031 (multicoin)
	Compressor failure	Hook up compressor direct to power.	If compressor runs, timer or switch is bad. If compressor does not run make sure the thermal overload is not tripped. (automatic reset when motor cools) If it is not – replace compressor.

COMPRESSOR

Problem	***Source***	***Test***	***Repair***
EXCESSIVE VIBRATION	Improper installation	Check installation for loose mounting or worn vibration mounts	Re-tighten hardware or replace vibration mounts
NO AIR PRESSURE	Chuck frozen	Remove chuck and restart. Air should flow freely out hose.	Keep extra chuck at location to switch with frozen
LOW AIR PRESSURE	Leaks	Check loose fittings	Tighten or replace.
	Dirty compressor filter	Examine compressor filter	Replace
	Worn compressor	Make sure compressor is putting out at least 50 psi	Repair / rebuild compressor.
COMPRESSOR RUNS INTERMITTENTLY	Compressor overheating	Check compressor fan. Check for blocked vents.	Replace fan. Clear vents.
	Power supply problem	Check incoming power versus electrical requirements.	

ELECTRICAL COMPONENT INFORMATION

SOLENOIDS (REMOTE UNITS ONLY)

Solenoids are used in ECO by OPW tire inflators to control a remote air or water source. To check solenoid switch:

1. Check to insure that unit has proper incoming electric and air supply.
2. Activate unit (push button or drop coin(s)).
3. The solenoid should open for the factory pre-set time (2 to 5 minutes).
4. If no air is supplied or if solenoid "hums," debris has fouled the valve gate and the solenoid must be replaced.

REPLACEMENT PARTS

31653	Solenoid Assembly (Air or Water)

PUSH BUTTON

The push button contact activates the timer in a free air machine. To test continuity:

1. Depress center of mounting for the switch.
2. Test continuity at the electrical contacts of the switch.
3. If there is no continuity when center of switch is depressed, replace contact.

REPLACEMENT PARTS

33189	Kit Button Base/Contact (push button units)

COIN ACCEPTOR

Unit Does Not Come On When Coin Is Dropped:

1. Check power connections from coin drop to timer.
2. Check for loose connections to the coin drop (2 wires).
3. Coin trip wire is out of adjustment. If wire is adjusted properly, you should hear one click pushing down on trip wire to activate and one click on the way back up. There should be about 1/16" to 1/8" clearance from coin drop housing to trip wire on the second click on the way back up. Wire can be adjusted by bending to allow proper clearance.
4. Test switch - check continuity across terminals when switch is activated.

Unit Will Not Turn Off At End Of 5 Minutes:

1. Check coin drop trip wire to make sure it clicks off. Bend tip of wire gently downward to adjust. Test with a quarter.
2. Check all connections for tightness. Use of wall receptacle is not recommended. However, if power plug is used check plug connections.
3. Check timer. See Timer.

REPLACEMENT PARTS

31666	Coin acceptor Imonex (102 W/ Recessed coin door & all 2000 vacs
33378	Micro switch for 31666 coin drop
31760	Coin acceptor square with slot (102 W/Hinged access door & single drop 708 vacs)
31181	Coin acceptor square with slot (double drop 708 vacuums only)
33054	Token acceptor square with slot (102 W/Hinged access door & single drop 708 vacs)
33055	Token acceptor square with slot (double drop 708 vacuums only)
33037	Micro switch for 31760 / 31181 / 33054 / 33055 coin drops

TIMERS

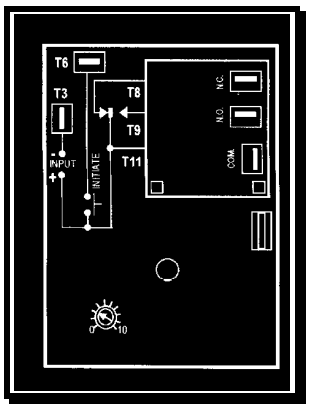

All cabinet style units (self-contained or remote) are supplied with a solid state timer with a variable time set resistor. Run time is preset at the factory. To check timer operation:

1. Check incoming power (T11) See Electrical Specifications.

2. Check to make sure pushbutton switch or coin drop is working then activate timer with the button or coin drop. There should now be voltage on terminal T9. If there is not, then replace timer with appropriate kit. The resistor is built into the timer. IF the unit does not time out properly the complete timer must be replaced.

3. For multicoin timers only - check to make sure the dip switch settings match the intended # of coins required to activate the unit. (i.e. Dip # 2 for 50 cent operation).

WIRING LOCATIONS

WIRE LOCATION	TERMINAL
ALL UNITS	
Incoming Power	
Black Wire	T11
White Wire	T3
Ground Wire	Center of timer*
REMOTE AIR UNITS	
Pushbutton or Coin Drop Switch	
Wire1	T11
Wire2	T6
Remote Air Solenoid (N.C.)	
Wire1	T9
Wire2	T3
Coin Counter (Optional)	
Wire1	T9
Wire2	T6
SELF-CONTAINED UNITS	
Pushbutton or Coin Drop Switch	
Wire1	T11
Wire2	T6
Compressor	
Blue Wire	T9
Brown Wire	T3
Coin Counter (Optional)	
Wire1	T9
Wire2	T6
* Note: Incoming ground wires can be connected to the side of the timer enclosure in some units.	

INFITEC MULTICOIN TIMER

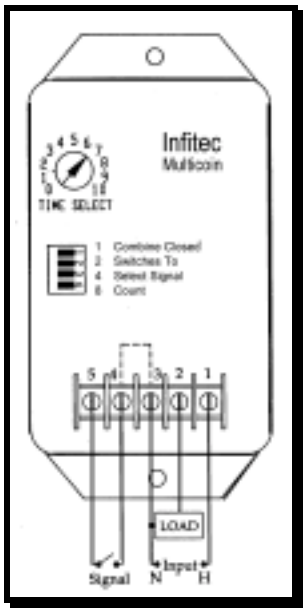

WIRE LOCATION	TERMINAL
ALL UNITS	
Incoming Power	
Black Wire	T1
White Wire	T3
Ground Wire	Side of the timer enclosure
REMOTE AIR UNITS	
Remote Air Solenoid (N.C.)	
Wire1	T2
Wire2	T3
SELF-CONTAINED UNITS	
Coin Drop Switch	
Wire1	T4
Wire2	T5
Compressor	
Blue Wire	T2
Brown Wire	T3
Coin Counter (Optional)	
Wire1	T2
Wire2	T3

REPLACEMENT PARTS

31211	Timer Kit Infitec (120v)
31784	Timer Kit Infitec (220V)
33031	Timer kit Multicoin

COMPRESSORS

The Thomas compressor is designed to operate in conjunction with a pressure relief valve. Under normal operation the compressor will charge the hose and as the hose reaches a certain pressure the pressure relief valve will open relieving pressure". If the chuck is placed on a tire, the pressure drop in the hose causes the unloader to open allowing air to flow into the tire.

Specifications

Horsepower	**3/4**
Voltage	115V
Phase	1
CFM @ 0 PSI	3.78
CFM @ 90 PSI	2.14
Max Amp Draw	10.6
Outlet Pressure	125

Preventive Maintenance

These compressors are oil-less with teflon rings and piston sleeves. DO NOT LUBRICATE THIS COMPRESSOR! The piston cups are designed to run dry and the grease packed sealed bearings require no additional lubrication. Replace compressor air filter every 6 months or sooner in dusty locations.

Pressure Relief Valve

All ECO BY OPW machines are supplied with a pressure relief valve to protect the compressor. DO NOT REMOVE THIS VALVE.

!! WARNING !!
DO NOT REMOVE OR PLUG THIS VALVE! The valve is designed to relieve head pressure. Removing or blocking this port can cause irreparable damage to the compressor!

Troubleshooting

A) Compressor Will Not Start:

1. Unit not plugged in, wiring connections loose or circuit breaker tripped. (20-amp delay type circuit breaker recommended.)
2. Hook up compressor direct to power, bypassing timer and start button. If unit will not start, thermal overload switch has tripped. (This switch automatically resets when motor cools, see below.)
3. If compressor starts and runs properly when hooked direct to power, timer is defective and should be replaced.

B) <u>Compressor Starts and Runs But:</u>

1. Operation is intermittent - usually motor overheats causing circuit breaker or internal thermal overload switch to trip. (This switch automatically resets when motor cools.)
   a) Check for proper voltage (115V +/- 10%) and amp draw. High amp draws are caused by overloaded branch circuits or undersized power wires for length of run.
   b) Check for proper output pressure - Air should relieve at the valve when the unit reaches its max pressure. If no air escapes, the valve has failed or the compressor piston is worn. **WARNING!! OPERATING THIS EQUIPMENT WITOUT A PRESSURE RELIEF VALVE WILL CAUSE IRREPARABLE DAMAGE TO THE COMPRESSOR!!!**
   c) Check for blocked air vents - a high heat environment or lack of ventilation will shorten the life of your compressor.

2. Air pressure generated is below 50 psi.
   a) Check for loose fittings.
   b) Clean air filter.
   c) Piston cup may be worn or damaged. Estimated service life - 10,000 hours minimum.
   d) Check head gasket.

THOMAS COMPRESSOR 120V

	PART #	DESCRIPTION	QTY
1	X30373	COMPRESSOR, 3/4 HP THOMAS 1/B/1	1
2	X30678	ELBOW, 90 DEG X 1/4 NPT, BRASS	1
3	X31908	PRESSURE RELIEF VALVE, 135PSI	1
4	X30677	TERMINAL, 1/4 FEMALE QUICKSLIDE	2
5	X40392	AIR FILTER, THOMAS	1
6	X31648	TERMINAL, RING	1

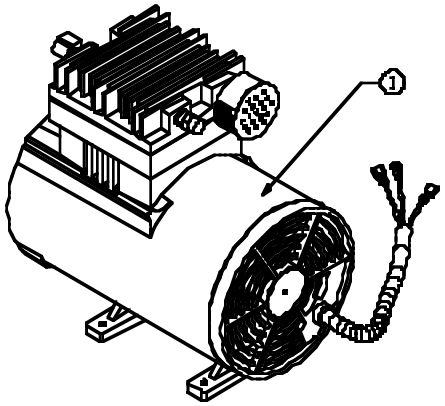

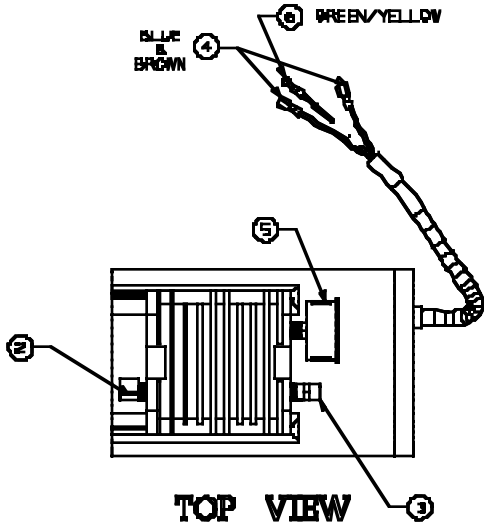

For 220V 50 hz 1 phase

Remove	Add
30373	30370

A) <u>DIAGNOSTIC KITS</u>

32596	CFM Gauge Kit
30446	Master PSI Gauge Kit

C)

COMPRESSOR

	Part #	Description	QTY
1	X40397	Connecting Rod Assembly	1
2	X40398	Relay, 115V 60 Hz	1
3	X40399	Capacitor	1
4	X40400	Lead Wire Assembly-Blue	1
5	X40401	Front Cover	1
6	X40402	Lead Wire Assembly-Brown	1
7	X40403	O-Ring-Valve Plate	1
8	X40404	Screw-Connecting Rod	1
9	X40405	Screw-Fan	1
10	X40406	Screw-Front Cover	4
11	X40407	Screw-Head	6
12	X40408	Lock-washer	1
13	X40409	Washer-Fan	1
14	X40410	Fan	1
15	X40411	O-Ring-Head	1
16	X40412	Dust Shield	1
17	X40413	Valve Plate Assembly	1
18	X40414	Head	1
19	X40415	Eccentric, Bearing, & Set Screw Assembly	1
20	X40382	Air filter Assembly	1

THOMAS COMPRESSOR ASSEMBLY

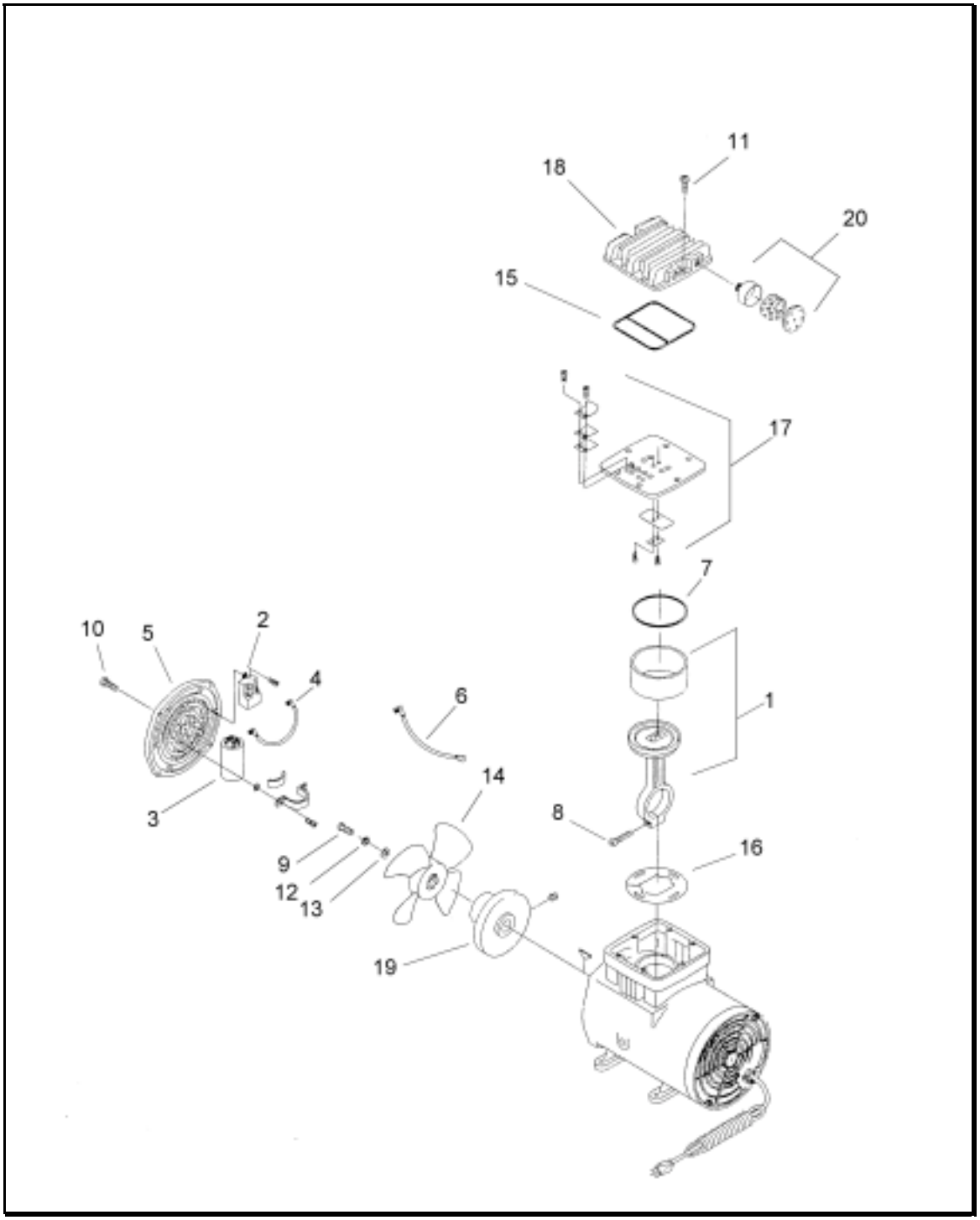

MECHANISM

INPUT REQUIREMENTS

PSI

The mechanism requires a minimum of 15-PSI differential between the input or supply pressure and the maximum outlet pressure. For example:

Model	Max Output	Input
2-Wheel	85 PSI	100 PSI
3-Wheel	115 PSI	130 PSI

Note: Maximum supply pressure is 165 PSI.

To check pressure available at Tireflator attach a gauge of known accuracy at the blowout valve connection. (Caution: To avoid injury, shut off air at compressor and completely bleed system before installing gauge.)

CFM

In addition to PSI, the mechanism requires an absolute minimum of 1.8 CFM to operate properly. In general, the more CFM that is supplied, the faster the unit will inflate and the longer the unit will operate without maintenance or component replacement.

PREVENTIVE MAINTENANCE

The ECO BY OPW automatic tire inflator has been designed and manufactured to perform in almost any operating environment. However, the mechanism is a precision instrument and requires ongoing care to prevent failure. These steps will ensure continuous, accurate operation.

Drain Regularly (Weekly)

For all remote units, water can collect inside the mechanism causing the meter to cycle erratically. To remove the water drain the water trap by loosening the drain plug (P/N 30186), the location of which is indicated by a red arrow. When re-closing the drain plug, tighten just enough to prevent air leakage. Excessive force may crack the casting and destroy the diaphragm assembly.

NOTE: Models with self-contained air compressors are automatically drained.

For all machines, drain the airline by laying the line out flat and depressing the chuck. The pulsing air stream will force out any water that may be remaining in the mechanism or air hose.

Check For Air Leaks (Weekly)

Leaks in the air system will cause the unit to cycle continuously which confuses customers and rapidly wears out all moving parts. Possible sources of air leaks include:

* Faulty chucks
* Blown diaphragm
* Quick connects leaking
* Leaks around base & cover diaphragm

When checking for system leaks it is good service practice to check cam and motor roller lever for wear, also check main valve / push rod for free movement.

Calibrate

Mechanism accuracy should be check every 6 months at a minimum. Improperly calibrated mechanisms can cause under or over inflation which **can cause a safety hazard** especially for small tires. See Calibration for instructions.

Prevent Freezing

Freezing of condensate water in the mechanism and/or hose can destroy a mechanism. For Models 97 and 98 install ECO BY OPW Mechanism heater and drain frequently. A mechanism heater is installed as standard equipment to eliminate freeze-up condition.

NOTE: DO NOT REMOVE PRESSURE RELIEF VALVE! This valve relieves system pressure when it exceeds the maximum compressor pressure.

To alleviate hose freezing problems keep a spare hose in a heated location (inside station) and switch with frozen hose.

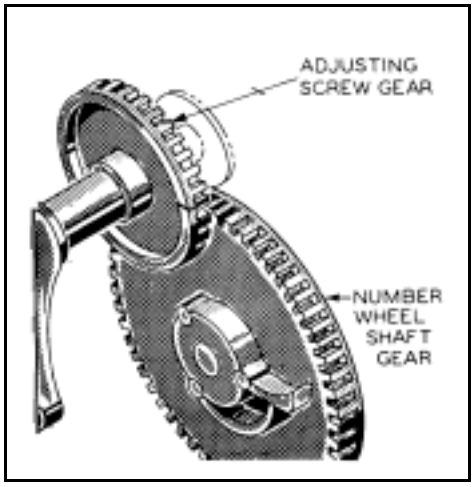

RECALIBRATION INSTRUCTIONS

1. Set the Tire Inflator at 30 PSI (210 KPA) and inflate a car tire until the bell stops ringing. Be sure to deflate tire enough to make the Tire Inflator deliver at least 3 pulsations (3 rings of the bell) to bring pressure up to the dial setting.
2. Check the tire pressure with a master gauge of known accuracy. If there is a difference in excess of one pound (7 KPA), plus or minus, between the master gauge and the Tire Inflator dial readings, recalibrate.
3. Expose mechanism. For 90 Series Models remove four screws from back cover (carrying the serial number plate) and remove the upper housing strip to expose the Tire Inflator mechanism. For cabinet style models simply open cabinet.
4. Remove lock out screw retaining adjusting screw and gear.
5. Pry out top gear outside the mechanism with a large blade screwdriver to disengage gear teeth. (See diagram).
6. While holding gears disengaged, turn lower, larger gear clockwise or counter-clockwise to match the dial face numbers to the master gauge reading.
7. Re-engage gears carefully and check pressure as before.

8. Replace parts removed in the first step.

TROUBLE SHOOTING

GENERAL

About 90% of mechanism failures are due to air leaks which in turn wear machines out. The best way to start inspection of mechanism is with a spray bottle filled with a soap solution. Spray soap solution around fittings, Q.C. sockets, main valve, and diaphragm.
Now take a screwdriver and from the back of the mechanism push the push rod on the main valve to your left. This will start the air moving through the system and identify signs of leaks. If no leaks appear check the main valve for excessive wear. While holding push rod in, spray main valve push rod around the bore. The main valve / push rod is designed to be a tight metal-to-metal fit. There should be a small amount of air blowing around push rod. If the solution is blown back out as fast as it is applied or if the push rod has worn an obround hole in the main valve, the main valve should be replaced.

SLOW INFLATION

1. Main valve orifice plugged. See **Main Valve**.
2. Insufficient supply pressure or restriction in supply line from compressor. (See **Input Requirements**)
3. Restricted, defective hose, hose greatly in excess of 25 feet, or larger than recommended 1/4" inside diameter.
4. Leaking quick connect at outlet connection.
5. Diaphragm strainer screen clogged with dirt or foreign matter. Replace.
6. Main Valve pushrod may be binding or worn. See **Main Valve**
7. Motor Side of diaphragm may be ruptured. See **Diaphragm**
8. Restricted hose chuck. We recommend a chuck which is not spring loaded and does not restrict flow of air.
9. If inflating above a 85 pound dial setting, shot lengthener assembly may be broken or out of adjustment (90 Series only).

BELL RINGS WHEN TIREFLATOR IS NOT IN OPERATION (RUN ON)

**** IMPORTANT NOTE ** - Air leaks which cause the mechanism to cycle will rapidly wear out the moving parts. Leaks should be repaired as quickly as possible.**

1. Air leak in system. The most common sources of air leaks are chucks and fittings. Identify source of leak and repair.
2. Ruptured or leaking diaphragm. See **Diaphragm**.
3. Mechanism box worn. Check where pin from motor arm lever is hitting box. If there is a noticeable indentation, mechanism box must be replaced.

MECHANISM CONTINUES TO DELIVER AIR AFTER TIRE INFLATED

1. Defective cam or motor roller. See **Cam & Motor Roller**.
2. Excessive leak in air hose assembly or in chuck due to badly worn chuck seal.
3. Ruptured or leaking diaphragm. See **Diaphragm**.

LEAKS

1. Defective or leaking quick connect.
2. Loose screws, nuts, or bolts.
3. Defective chuck seal.
4. Broken or porous hose.
5. Tubing connections not sufficiently tightened.
6. Main valve not seating. Usually caused by dirt, water, or foreign matter. Encourage owners to open drain valve at least once a week. Excessive leakage at main valve may cause

internal check valve to produce a "buzzing" noise. Refer to **Main Valve**

BELL DOES NOT RING DURING INFLATION

1. Broken bell or bell clapper. See **Bell Clapper**.
2. Bell clapper off fulcrum pin.
3. Broken leg off of cam. See **Cam / Motor Roller**

MECHANISM WILL NOT INFLATE

1. Pressure in tire is equal to or greater than dial setting. We recommend partial deflation of tire to make Tireflator deliver at least three shots of air.
2. Air supply shut off at compressor. (Remote units only).
3. Check valve bullet seized. See **Check Valve**.
4. Supply line or diaphragm strainer screen completely clogged with foreign matter.
5. Hose deteriorated on inside, preventing flow of air to tire.
6. Broken motor lever spring. Replace.
7. Motor roller lever spring broken or unhooked. See **Motor Roller Lever**.
8. Main valve clevis disengaged from cam. If clevis is broken replace main valve assembly.
9. Broken valve cam pin that engages main valve clevis link or broken valve cam. Replace.
10. Broken pin at top of motor lever arm assembly. Replace.
11. Lock lever adjusted in too far (90 Series Only). See **Lock Lever**.
12. Relief valve seal blown. Replace.

TIREFLATOR REPORTED TO BE INACCURATE

1. Mechanism requires recalibration. Always check with master gauge of known accuracy. Ordinary hand gauges cannot be depended upon for accuracy. On every inflation, some air in tire should be released to insure at least 3 shots of air to inflate tire to desired pressure. See **Recalibration Instructions**.

2. Broken main valve inflator spring. (Very remote possibility.) Replace.

3. Leaking or ruptured diaphragm. See **Diaphragm**.

4. Main calibrating spring worn / damaged.

DIAL WHEELS ARE JAMMED OR SKIP

1. If tireflator is jammed on maximum pressure setting lift up on pinion shaft and turn down to normal maximum pressure (85 on 2 Wheel, 115 on 3 Wheel). Install lock out spacers to prevent further problems (See **Lock Out**).

2. If mechanism is dialed below 5 psi the locking pawl is broken or out of adjustment. Inspect locking pawl where it contacts the number wheel. If edges of pawl are below number wheel replace.

3. If numbers skip 10 psi when dialing in pressure check pinion gear teeth. If they are notched replace. Make sure that number wheel and gear are meshed.

UNABLE TO COMPLETELY INFLATE HIGH PRESSURE TIRES

1. Inadequate supply pressure or CFM. See **Input Requirements**.

2. For example, if dial setting is 75 pounds and supply pressure is below this figure, mechanism will continue to cycle, although the desired pressure will never be attained. Supply pressure (maximum of 165 pounds) must be at least 15 pounds above dial setting to completely inflate tire and automatically shut off mechanism. Bear in mind that compressor gauges are not always accurate and further that line restrictions greatly reduce the air

supply pressure.

BELL STOPS RINGING BUT VALVE DOES NOT SHUT OFF

1. Jammed or broken main valve. See **Main Valve**.
2. Valve cam or motor roller may be worn. Replace.

TIRE INFLATOR LETS AIR OUT OF TIRE

1. Inflator side (smaller) of diaphragm may be ruptured. See **Diaphragm**.

2. Cam & Motor roller worn. Replace.

3. Tire chuck or hose may be damaged. Replace and check for leaks.

4. Air Leaks From Back Of Main Valve Continuously. Check valve may be leaking (See **Diaphragm**) or valve seat washer in main valve may be leaking (See **Main Valve**).

COMPONENT INFORMATION

MAIN VALVE

The pushrod / main valve assembly is designed to be a tight metal-to-metal fit. All main valves are preset at factory, the stop screw for push rod should not be removed or adjusted. However, the inflator valve area can be rebuilt.

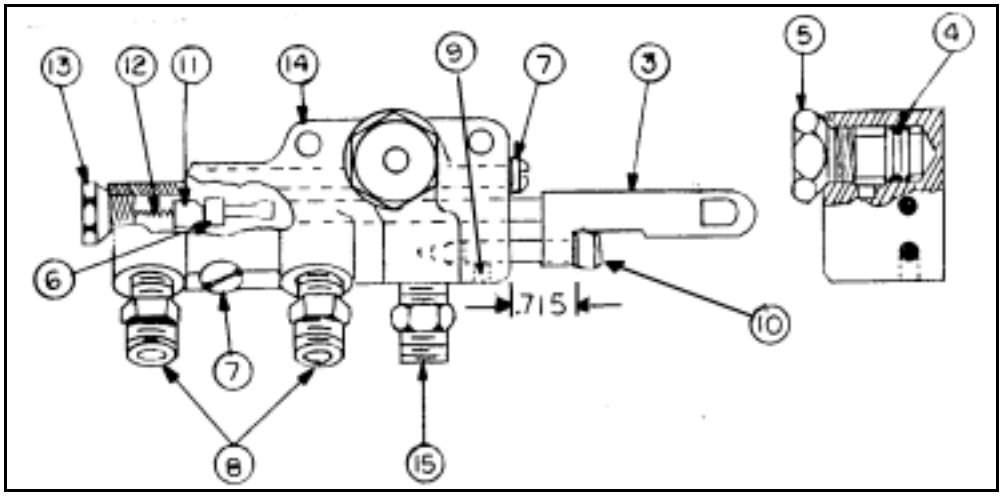

	3.	Pushrod / Clevis Assm	NSS
	4.	* "O" ring	NSS
	5.	Orifice Plug / Screen	30169
*	6.	* Valve Seat Washer	NSS
	7.	Screw Plug	30160
	8.	Tube Coupling	30228
	9.	Allen Set Screw	30331
	10.	Valve Stop Screw	30256
*	11.	* Inflator Valve	30156
	12.	Valve Spring	30155
	13.	Inflator Valve Screw	30154

	14.	Main Valve Body	NSS
	15.	Tube Coupling	30161
*		Valve Kit	31307

A)

B) <u>To clean the push rod:</u>

1. Loosen set screw (9)
2. Remove stop screw (10)
3. Clean push rod with Scotchbrite or Emory cloth
4. Lubricate push rod with light oil.
5. Replace parts in reverse order.

C) <u>To Replace Inflator Valve Spring:</u>

1. Remove main valve from mechanism box. Remove 1/2" hex cap.
2. Remove inflator valve seal & spring.
3. Check Valve seat washer. If it has swelled due to oil in line or is not sealing. Replace and review compressor maintenance procedures.
4. Install new parts. Rebuild kit #31307.

D) <u>To Check Main Valve for Excessive Wear:</u>

1. Examine hole where push rod (3) enters main valve body. Check wear by gently rocking push rod side to side. Push rod should move freely into bore without noticeable side movement.
2. If an oblong wear pattern between push rod and main valve body has developed valve is unusable. Replace with new (P/N 30470).

E) <u>To Clean Orifice or Screen in Orifice Plug:</u>

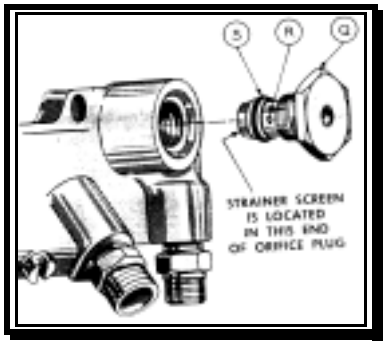

1. If orifice or screen in orifice plug (Q) is clogged remove plug.

2. Use very fine wire or about a No.78 drill bit to clean. Do not force wire into hole, enlarging hole would reduce the amount of air per shot.

3. Check "O" ring (S) for cuts or cracks. Replace if necessary.

MOTOR ROLLER LEVER / VALVE CAM

Worn cams can cause the mechanism to run on, be out of calibration, or lock out, depending upon degree of wear. Always replace motor roller lever and cam with kit #30906. A new design was implemented for longer life in 1994. The motor roller lever is marked with "94," and the cam has a metal insert. DO NOT USE OLD STYLE CAMS OR MOTOR ROLLERS!!!

A) <u>Replacement of valve cam and or motor roller assembly:</u>

1. Shut off air at compressor and bleed system of air at hose chuck.
2. Remove mechanism cover plate.
3. Remove snap rings & push pin to right on hose hook lever (90 Series only).
4. Remove lock lever (90 Series only).

5. Remove motor lever and spring.
6. Remove valve cam.
7. Install new cam and snap ring. Make sure that pin on back of cam freely engages slot in clevis at end of main valve push rod.
8. Reconnect roller lever spring too new "94" motor roller lever.
9. Replace lock lever so that lower end is positioned between adjusting screw and tension spring. Replace pin and snap rings. (90 Series)
10. Check lock lever adjustment (90 Series) See Lock Lever.
11. Turn on air supply and check calibration.
12. Replace mechanism cover plate.

MAIN VALVE LOCKOUT LEVER

Note - This feature is applicable in 90 Series (Models 97 & 98) only.

The purpose of the lockout lever (#30202) is to shut down the mechanism when the unit is not in operation. This feature is critical to **prevent minor air leaks from destroying the mechanism.**

If the lockout lever is not adjusted properly, and a system leak develops, the mechanism will sense a pressure drop and begin an inflation cycle. If the leak is not stopped, the unit will continually cycle until it fails (run-on condition).

A) To check lockout lever:

Move the lockout lever forward so as to place head of lever between post and point on cam. Hanging the hose on the hook moves the lever forward. When the hose hook is raised by its spring, the lockout lever should move out from between the post and the cam so that the cam can operate the main valve.

B) To adjust lockout lever:

1. It is advisable not to shut off the air at the compressor. Caution should be exercised to avoid possible injury while working with the moving parts of the mechanism.
2. Take off rear housing cover, carrying specification plate, by removing four screws and fibre washers.
3. Take off mechanism cover plate (if unit has a heater) by removing three screws.
4. With the hose hook held down by the weight of the hose and the cam in right hand position, loosen lock nut and turn screw until head of lock lever is centered on cam at point.
5. To test adjustment, remove the hose from the hose hook. Permit the mechanism to cycle several times by opening the hose chuck valve. Next pull the hose hook lever down to move the lockout lever into lockout position. Make final check on the adjustment to assure that head of lever is centered on the cam, then securely tighten the lock nut and reassemble in reverse order.

IMPORTANT NOTE: ALWAYS TEST MECHANISM IN VERTICAL POSITION! CHECK VALVE OPERATES ON GRAVITY.

DIAPHRAGM

The diaphragm used in the ECO BY OPW mechanism is made of cloth and neoprene coated. Even under heavy mechanism use, it should last several years. While working on the diaphragm assembly it may be helpful to refer to the diaphragm parts explosion in this manual.
Checking For Ruptures

From the back of the mechanism, use a screwdriver to move cam and pushrod to the left, forcing air through the system. There are two small holes in the base which allow air into the chambered areas so that when the diaphragm moves it does not create a vacuum. If the diaphragm is ruptured there will be air coming out of those holes.

A) Checking For Leaks

Spray diaphragm sealing area with a soapy solution. With air cycling through the system (cam and push rod to left) check seal around diaphragm and fittings. Tighten screws and / or fittings to stop leaks. If diaphragm will not seal completely replace.

B) <u>To Replace Diaphragm Assembly:</u>

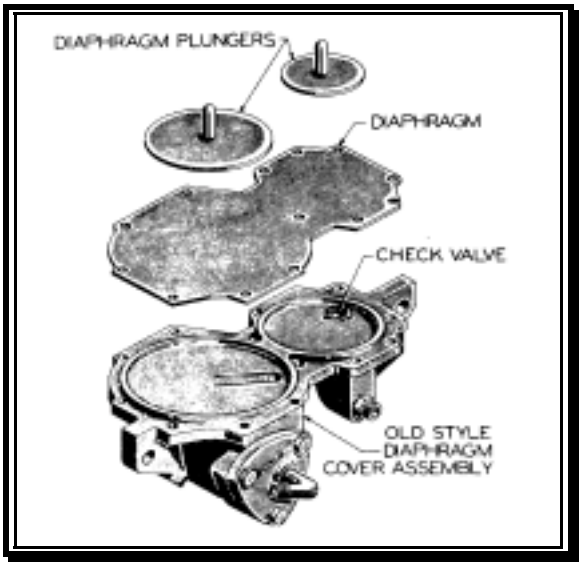

1. Shut off air and remove the mechanism from the housing.
2. Remove lock lever and hose hook lever (90 Series only).
3. Remove motor roller lever and spring, cam and motor lever spring.
4. Unhook main calibrating spring from inflator arm. Turn number wheels until they stop (05 psi). Lift locking pawl up and out of notch on the number wheel. Remove screw and gear assembly.
5. Remove main valve.
6. Remove 5/16" bolts (2) which hold base and cover assembly to mechanism box.
7. Remove base and cover (push down) from mechanism box.
8. Remove all screws from base and cover and separate. Remove diaphragm.
9. Before installing new diaphragm, spread thin coat of grease on the raised edge of diaphragm cover. This will swell the diaphragm and aid in sealing.
10. Inspect holes where plungers enter diaphragm. If holes show oblong wear patterns replace base.
11. Reinstall screws half tight. While squeezing arms together (stretching diaphragm), tighten in a criss-cross pattern. Important note: **DO NO REUSE DIAPHRAGMS!** Once the diaphragm has been compressed it will not seal properly.
12. Reinstall main valve, motor arm spring, cam and motor roller lever and spring.
13. Reinstall main calibrating spring making sure loop of spring is securely hooked to inflator arm. Note: Screw in screw and gear close to number wheel gear. Turn numbers to 70 psi. With a slight outward pull turn screw and gear in, meshing with number wheel gear. Run wheels up to 30 psi and recalibrate (See Recalibration).
14. Recheck mechanism for leaks with soap solution.

DIAPHRAM CHECK VALVES

A) <u>To replace check valve (bullet):</u>

1. Remove the mechanism from the housing.
2. Remove check valve retainer from diaphragm cover
3. Replace with new parts (Kit #30236).

B) <u>If check valve retainer cannot be removed:</u>

In some cases the check valve retainer is very difficult to remove. If it will not come out of the diaphragm cover, as a last resort only, try the following procedure:

1. Unscrew hose assembly.
2. Spray CRC type lubricant into hose fitting. <u>Do not use heavy base lubricant</u> as it will clog system.
3. Reinstall hose assembly.
4. Tap diaphragm cover chimney while cycling mechanism to lubricate check valve. If this procedure fails to free the check valve bullet, the diaphragm cover must be replaced.

C) <u>To replace orifice plug:</u>

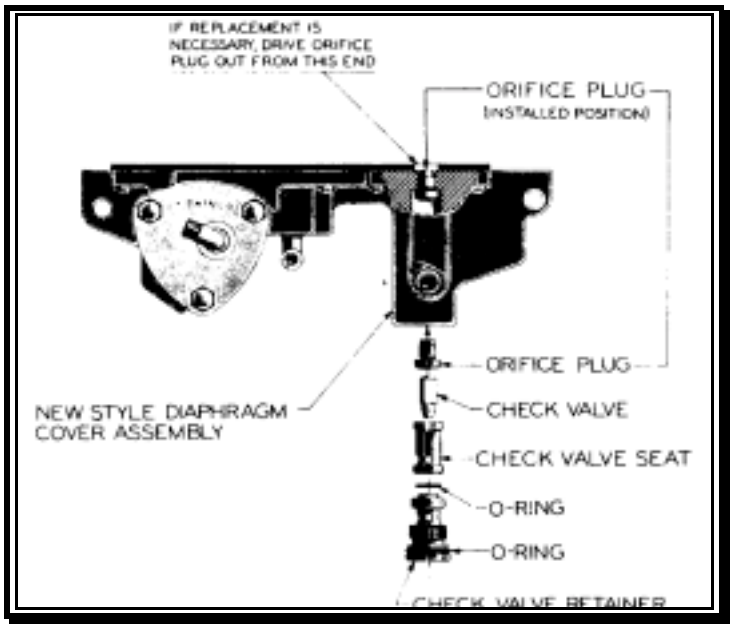

The orifice plug is made of stainless steel and normally should not require replacement. However, if exceptionally bad operating conditions make replacement necessary, the orifice plug can be extracted:

1. Drive a center punch into the back of the orifice plug to dislodge plug.
2. Invert the diaphragm cover and properly align the new orifice plug with the receiving hole in the casting
3. Drive the new orifice plug into place. The orifice plug should be driven in as far as possible against its shoulder, employing a brass rod so as not to damage the seat on the plug. If a new diaphragm cover is ordered, the orifice plug will already be installed in the casting.

****IMPORTANT NOTE** - ALWAYS TEST MECHANISM IN VERTICAL POSITION! CHECK VALVE OPERATES ON GRAVITY.**

LOCKOUT SPACER REMOVAL AND INFORMATION

The mechanism can be locked out at any pressure up to a maximum of 135 psi (3 Wheel). Maximum lockout pressures vary by machine depending upon the mechanism installed and the CFM and pressure capacity of the supplying compressor (See Input Requirements).

Standard tireflators are locked out at the below pressures:

LOCKOUT PRESSURES

	SELF CONTAINED	REMOTE
2 Wheel	85 psi	85 psi (max)
3 Wheel	115 psi	125 psi
KPA	620 KPA (max)	950 KPA (max)

New lockout pressures can be set by adding or removing lockout spacers located inside the mechanism box:

1. Expose mechanism - (On 90 Series remove rear housing) Remove 3 screws from heater plate (optional).
2. The red limiting spacer will be in the upper left-hand corner of mechanism box. To remove simply pry off with screwdriver. To install simply snap into place.
3. CAUTION - After removal of spacer, turn dial to maximum new setting. If dial wheel can be forced to 99/990/9.9, an additional spacer should be added. We carry 3/16", 1/4", 3/8" and 1/2" spacers (1/16" equals approximately 5 pounds on a standard mechanism).

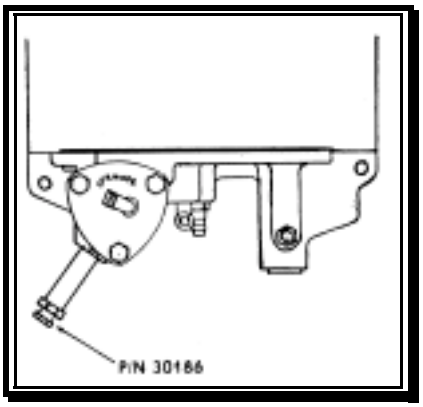

DRAIN PLUG

The drain plug will remove water build-up in the mechanism. Excess water could result in freezing, corrosion and malfunctioning of the mechanism. Weekly draining of the mechanism is suggested to prevent problems.

A) <u>How To Drain:</u>

1. Loosen drain plug P/N 30186 1/2 turn with a 1/2" wrench.
2. "Blow out" water by turning on air supply.
3. Tighten drain plug after all traces of moisture are gone.

BELL AND BELL CLAPPER

If the Tireflator is functioning but the bell fails to ring after each cycle of the mechanism, the bell and bell clapper should be inspected for excessive wear or breakage.

A) <u>Replacement of Bell and Bell Clapper:</u>

NOTE: On Model 97 installation (wall mount), remove thin plate at bottom of mounting bracket then loosen two cap screws which hold tireflator head to bracket, and turn head to an easy working position.

1. Shut off air at compressor and completely bleed air from system at hose chuck.
2. Remove rear housing (carrying serial tag) and mechanism cover plate.
3. Remove cam and lock lever to expose bell clapper parts.
4. Unhook lock lever spring from stud.
5. Remove snap ring from end of lock lever pin. Push pin out to right and lift out lock lever.
6. Disconnect roller lever spring at stud and move spring out of way.
7. Remove snap ring and take off valve cam.
8. If bell clapper is excessively worn or broken, remove elastic lock nut and shoulder screw and install new clapper.
9. Operate clapper manually to determine if bell rings. If not, remove front housing cover and dial face, and replace bell which is held in place by one screw.
10. Replace all parts in reverse order.

HEATER KIT

Heater kits are 30 watt adhesive backed pad type heaters. The heaters will help keep condensate water from freezing inside the reel or mechanism (Mechanism Heater Kit - P#31218)

1. Install mechanism heater assembly to back of mechanism and to brass main valve with (3) 8-32 x 5/16" self-tap screws supplied.

2. Route wires to left, front, corner of cabinet and down along power wires.
3. Tie heater wires to power wires away from sharp edges with plastic ties supplied.

NUMBER WHEELS / LOCKING PAWL

A) <u>To Replace Number Wheels, Pinion, Locking Pawl</u>

1. Remove mechanism and dial knob.
2. Remove lock out screw from box.
3. Remove screw and gear by turning counter clockwise.
4. When gear stops at 05-psi lift up on pinion shaft to disengage locking pawl leg from notch on number wheel.
5. Loosen sets crews on number wheel shaft and locking pawl.
6. Remove pin which holds right side of number wheel.
7. Remove pinion, shaft pinion, locking pawl and number wheel shaft.

B) <u>To Reinstall</u>

1. Insert number wheel shaft with collier inside of mechanism box.
2. Install wheels. 30109 gearless wheel first then 30112 geared wheel(s). Install brass washer then spacer.
3. Position number wheel gear so that leg on outside of gear is straight up. Push collier to right against mechanism box. Shaft should spin freely.
4. Turn number wheel on right to 05 and install pin through wheel into shaft. Install pin with flared end up.
5. Turn left and center wheels to 00.
6. Install pinion shaft and pinion placing small tooth into gear on number wheel.
7. Install locking pawl and locking pawl spring.
8. With wheels on 05, bent leg on pinion shaft should rest against the stop on the number wheel shaft gear. Leg on the locking pawl should rest in "V" groove on number wheel. In this position tighten set screws.
9. Test number wheel operation by dialing up to 70 psi and then back to 05. Wheels should stop at 05.
10. Install screw and gear. Reinstall set screw. Turn to 30 psi and re-calibrate. (See **Recalibration**)

MECHANISM (Front view)

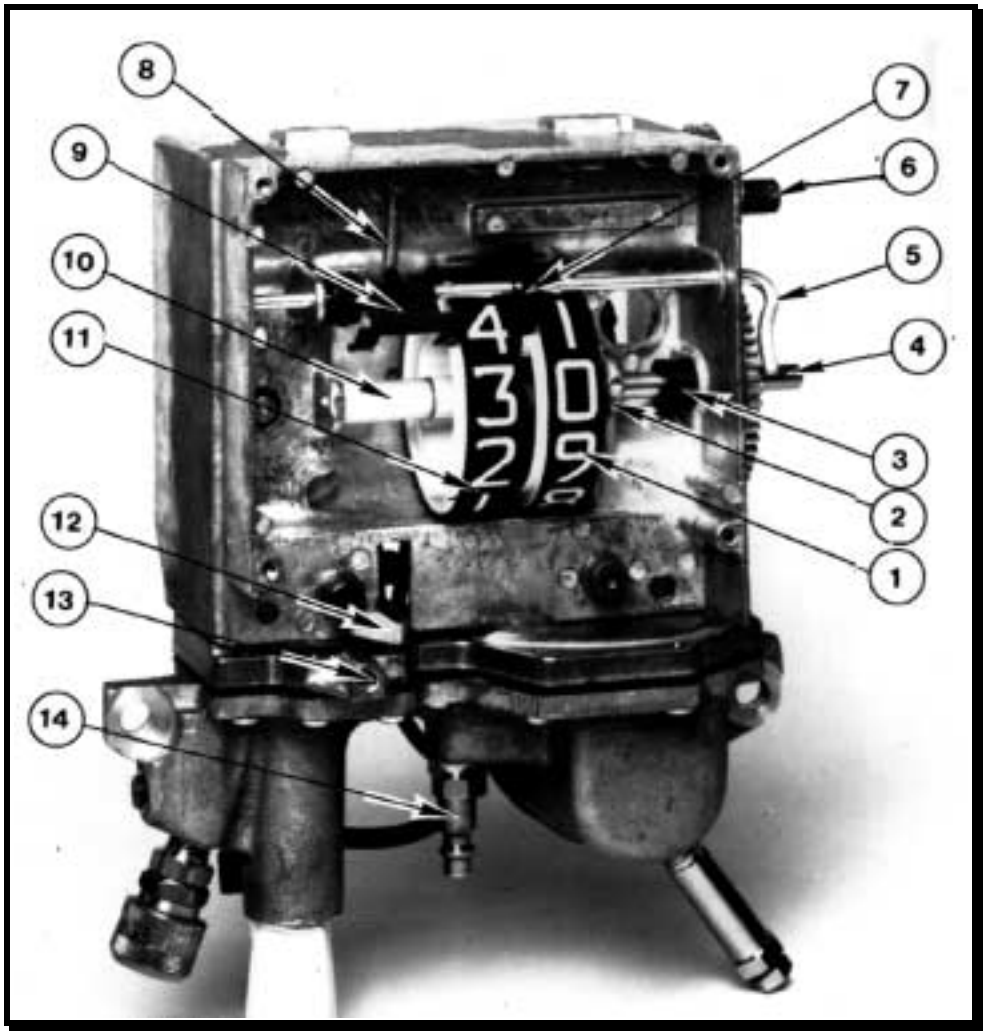

Itm#	Description	Part#	Itm#	Description	Part#
1	Number Whl Right	30109	8	Spring Locking Pawl	30084
2	Pin	30111	9	Locking Pawl Assy	30557
3	Collar	30302	10	Spacer	30348
4	Shaft & Gear	30415	11	Number Wheel Geared	30112
5	Shaft Pinion	30107	12	Bell Clapper	30176
6	Screw & Gear	30119	13	Bell (Not Shown)	30172
7	Trans. Pinion	30087	14	Plug	31398

MECHANISM (Back View)

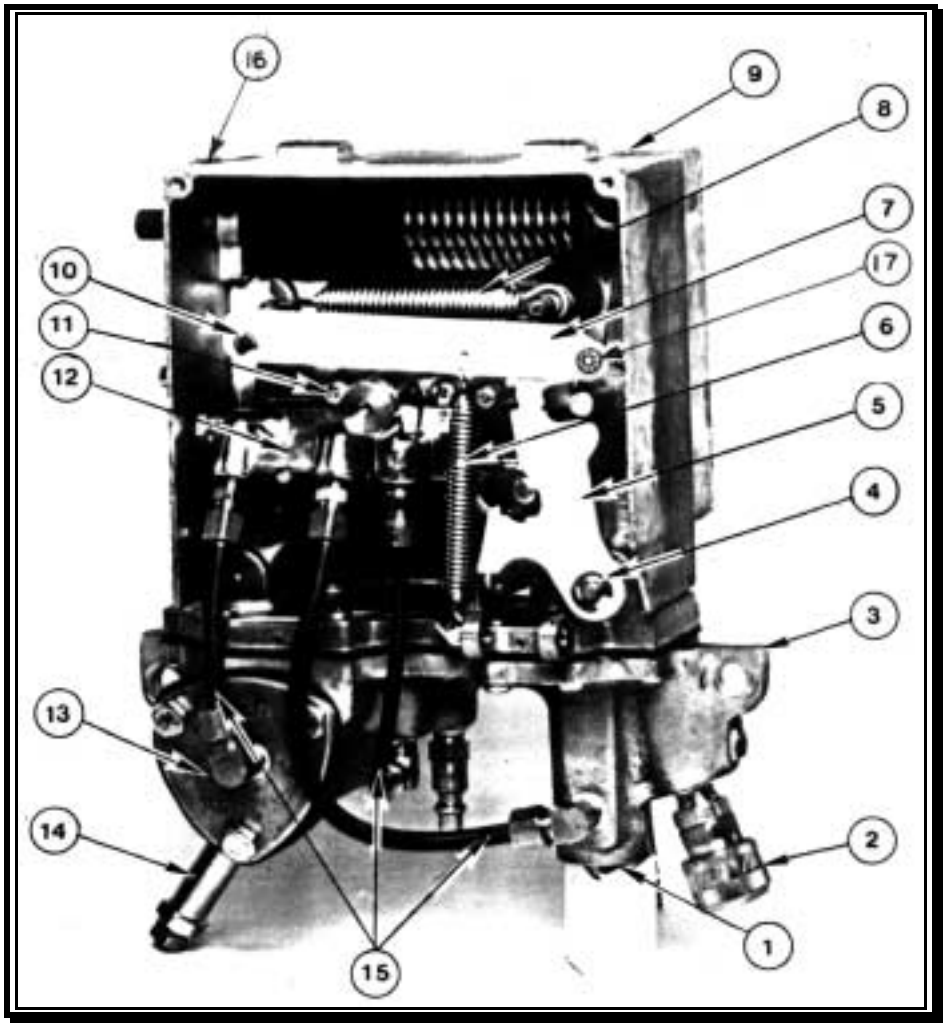

Itm#	Description	Part#	Itm#	Description	Part#
1	Retainer Assembly	30784	8	Motor Lever Spring	30136
	Cage	30341	9	Mechanism Box	30402
	Valve	30330	10	Retainer	30141
	Seat	30233	11	Screw (7/8)	30184
2	Quick Connect Socket	31350	12	Main Valve	30470
3	Diaphragm Cover	30222	13	Strainer Cover	30384
4	Retainer	30147	14	Drain Tube	30185
5	Cam	NSS		Drain Plug	30186
6	Motor Roller Spring	30210	15	Tubing (See Kits)	NSS
7	Motor Roller	NSS	16	Locking Screw	NSS
			17	E Clip Bearing	NSS

DIAPHRAGM / COVER

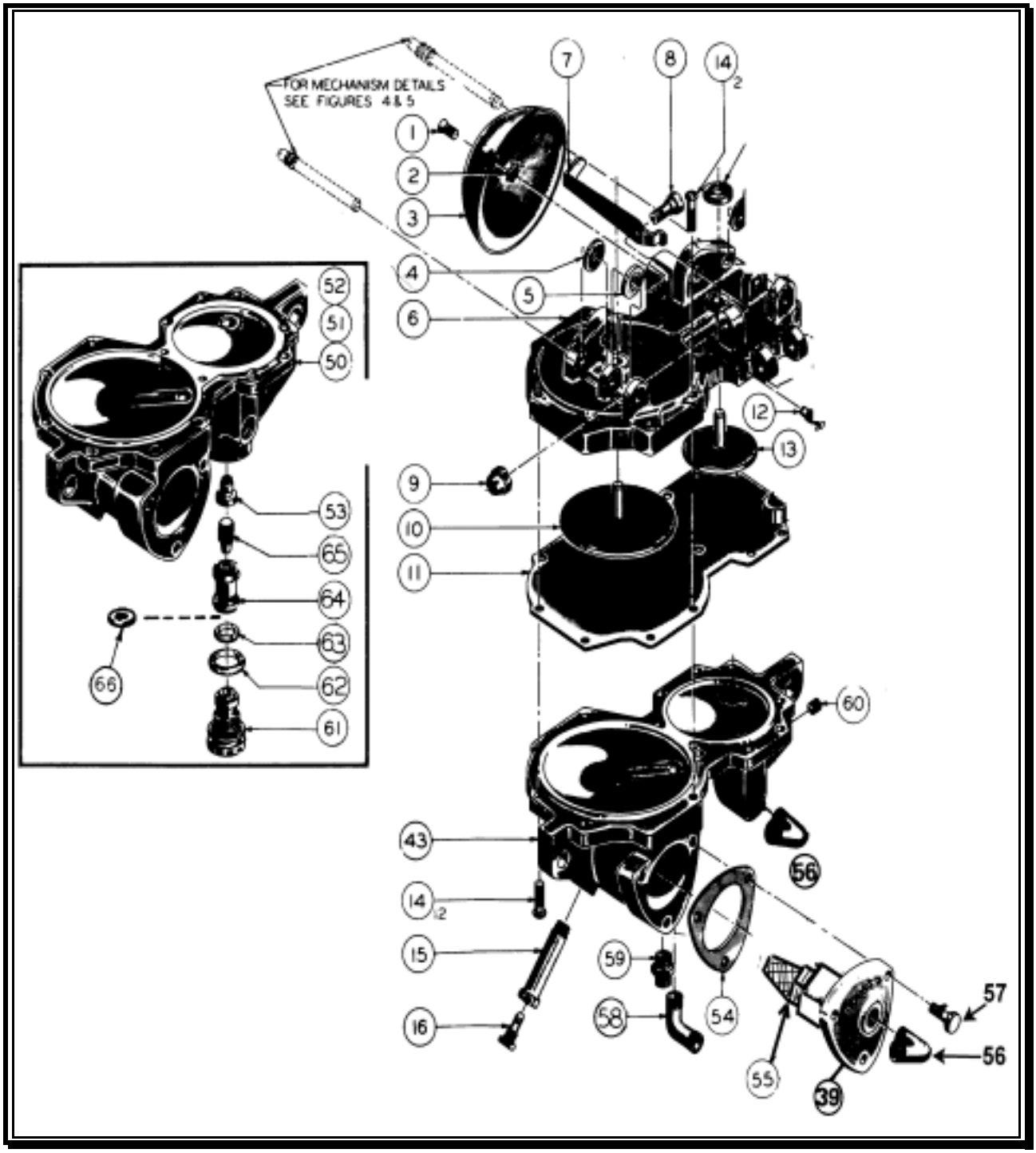

DIAPHRAGM / COVER

Ref#	Description	Part#
1	Screw	30071
2	Lockwasher. No. 10 Shakeproof	30072
3	Bell	30172
6	Base & Pin Assembly (incl. #12)	30175
7	Clapper Bell	30176
8	Screw, Special	30177
9	Nut Stop	30178
10	Plunger Assembly, Motor Diaphragm	30179
11	Diaphragm	30180
12	Pin Roller Lever Spring	30181
13	Plunger Assembly, Inflator Diaphragm	30182
14	Screw	30184
15	Nipple, Drain Plug	30185
16	Plug, Drain	30186
39	Cover, Strainer	30384
43	Cover Assembly Diaphragm Kit	30212
53	Plug Orifice	30223
54	Gasket Strainer Cover	30224
55	Strainer	30358
56	Elbow	30226
57	Screw Hex Hd Cap	30090
58	Elbow, Tube	30227
59	Plug 1/4" X 1/8"	31398
60	Plug Pipe, Socket Head 1/8	30229
61	Retainer	30230
****	Included in Check Valve Kit	30236
62	Ring "O"	30309
63	Ring "O"	30232
64	Cage, Check Valve	NSS
65	Valve Check	NSS
66	Seat Valve	30233
NSS	Not Sold Separately	

SPARE PARTS

MECHANISM REPLACEMENTS

30239	Mechanism 2 WH 90 Series
30237	Mechanism 3 WH 90 Series
30242	Mechanism 2 WH 100 Series Self Contained
31538	Mechanism 3 WH 100 Series Self Contained (Truck)
30952	Mechanism 2 WH 100 Series Remote
30954	Mechanism 3 WH 100 Series Remote

REPAIR PARTS / KITS

30470	Main Valve Assy
31307	Main Valve Service kit
30166	Lever Assembly Motor
30167	Lever Assembly Inflator
31423	Mechanism Box Assembly
30175	Base and Pin Assy
30486	Base and Pin Assy with Levers
30212	Diaphragm cover assembly (service replacement)
30180	Diaphragm
30236	Check valve service kit
30258	Strainer cover assembly
30150	3/16" tubing replacement kit
30151	1/2" x 1/4" tubing replacement kit
30152	7/8" x 1/4" tubing replacement kit
31218	Mechanism heater kit (30 watt)

NOTE: For individual part numbers see identification diagram for each component.

PARTS IDENTIFICATION

MODEL 103 OUTSIDE VIEW

Ref#	Part Name	Part#
1	Post	32444
2	Screws Security Button Head	33075
2A	Washers	938628
3	Face 101	33076
4	Cover SS	33084
5	Push button	33189
6	Hose 25ft Cut Resist Goodyear	30947
7	Hose Hook	33130
8	Chuck Sealing Ball Foot	31169
	Hose Assembly (6,8)	31311

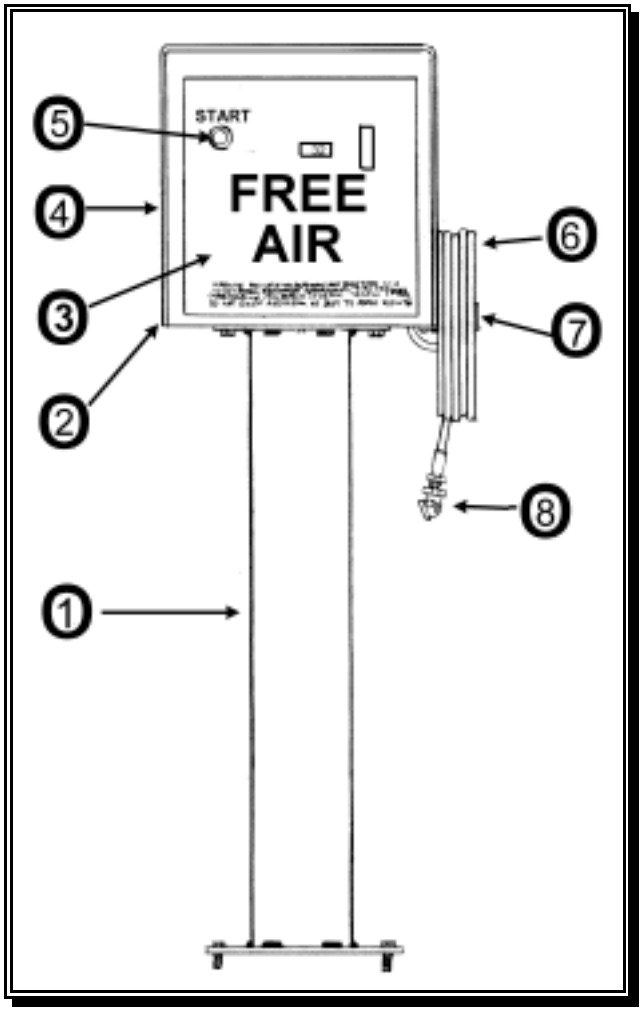

MODEL 103 INSIDE COMPONENTS

Ref#	Part Name	Part#
1	Hose Hook	33130
2	Mechanism 2wh	30242
3	Timer	31528
4	Push Button / Contact Block	33189
5	Manifold Assy (See Drawing)	33124
6	Compressor Mounting Hardware	
	Screw	816214
	Lock washer	31828
	Vibration mount	33081
7A	Thomas Compressor Assembly 120V 60 hz 1 ph	40385
7B	Thomas Compressor Assembly 220V 50hz 1 ph	40384
8	Hose Assembly	31311

REPLACEMENT PARTS - GENERAL

NOTE: For parts breakdowns and more detailed spare parts listings check the appropriate component section of this manual

DIAGNOSTIC KITSKITS

32596	CFM Gauge Kit
30446	Master PSI Gauge Kit

POST (Models 101 - 107)-600 SERIES REPAIR OR MODIFICATION

32444	Bottom Mount Post Assembly
70086	Post Guards Kit

HOSE REPAIR& HOSE REPAIR

30947	Wire braid hose Flexsteel 25' (Air or Water)
31311	Hose Assembly 25' With Ball Foot Sealing Chuck (For Mechanism Units)
30944	Hose Assembly 25' With Gauge, Whip and Non-sealing Chuck (For Non-Mechanism Units)
31886	Chuck, non-sealing type (Non-Mechanism Units)
31169	Chuck, ball foot sealing type (Mechanism Units)
30948	Gauge Hand Held With Whip and Non-sealing Chuck (For Non-Mechanism Units)
30653	Water Nozzle (For water hose option)
31114	Male Plug _ inch MPT for Quick Connect

KEYS / LOCKS / TOOLS/ LOCKS

30588	Abloy Lock (Model 102 W/ Recessed Coin Door)
33301	Spacer For 30588 Lock
33322	Key For 30588 Lock
33306	Cam For 30588 Lock
33151	Tubular Lock (Model 102 W/ Hinged Access Door)
33152	Key For 33151 Lock
33096	Cam For 33151 Lock
33108	Access Tool (101,102,103)
33029	Tubular Lock (Models 105, 106, 107, 108, 708)
33030	Key for 33029 Lock

WARRANTY

Notice: OPW products must be used in compliance with applicable federal, state, and local laws and regulations. Product selection should be based on physical specifications and limitations and compatibility with the environment and material to be handled. OPW makes no warranty of fitness for a particular use. All illustrations and specifications in this literature are based on the latest production information available at the time of publication. Price, materials, and specification are subject to change at any time, and models may be discontinued at any time, in either case, without notice or obligation.

STANDARD PRODUCT WARRANTY

OPW warrants that products sold by it are free from defects in materials and workmanship for a period of two years from the date of shipment by OPW. As the exclusive remedy under this limited warranty, OPW will at its sole discretion, provide a replacement or issue credit for future orders for any product that may prove defective within the two year period. This warranty shall not apply to any product that has been repaired by any party other than a service representative authorized by OPW, or when failure is due to misuse, conditions of use, or improper installation or maintenance. OPW shall have no liability whatsoever for special, incidental or consequential damages to any party, and shall have no liability for the cost of labor, freight, excavation, clean up, downtime, removal, reinstallation, loss of profit, or any other cost or charges.